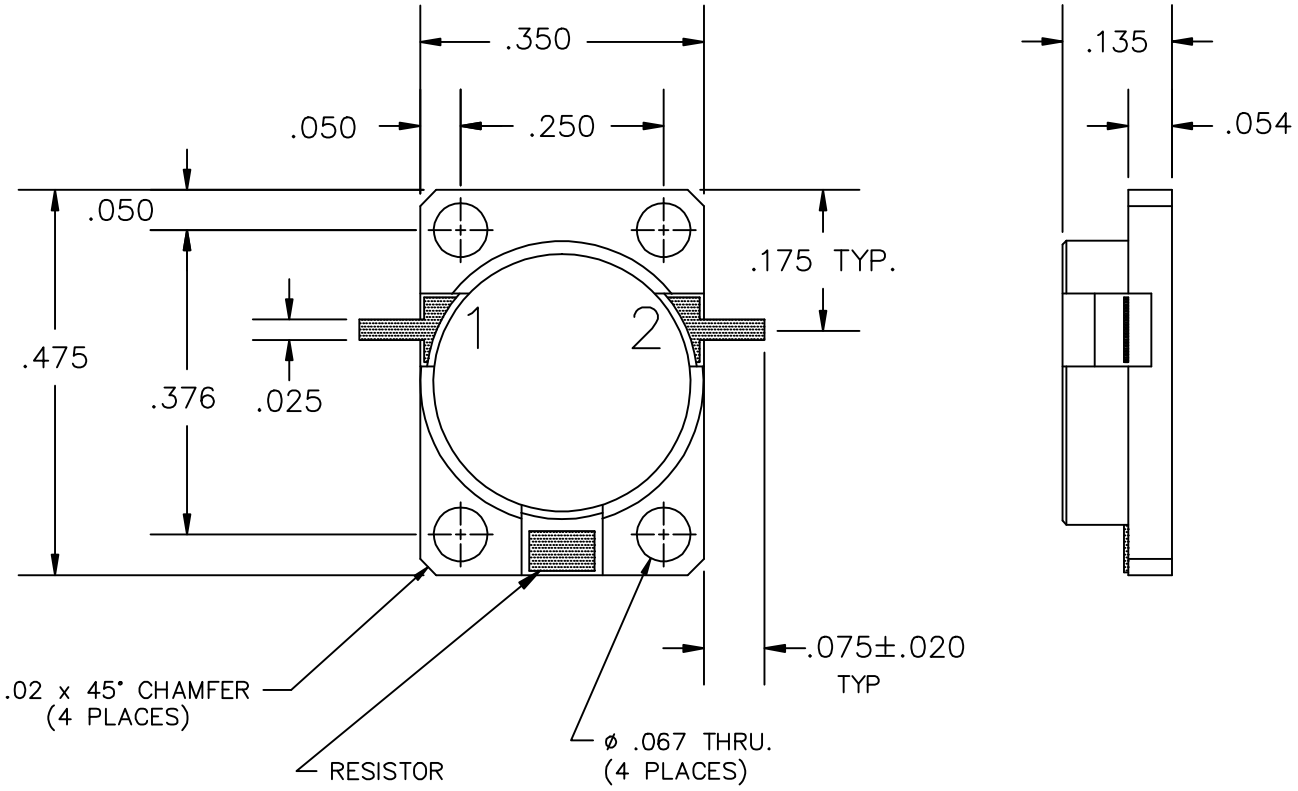
.350
.050
.250
.135
.054
.050
.175 TYP.
.475
.376
.025
1
2
.075±.020
TYP
.02 x 45° CHAMFER
(4 PLACES)
RESISTOR
ø .067 THRU.
(4 PLACES)

DI–15